NOTE:

1 - 23" O. D. ADAPTER SURFACES ACCEPT STANDARD 24" I. D. FRP OR PVC RISERS.
2 - TANK WILL HAVE IAPMO LABEL.

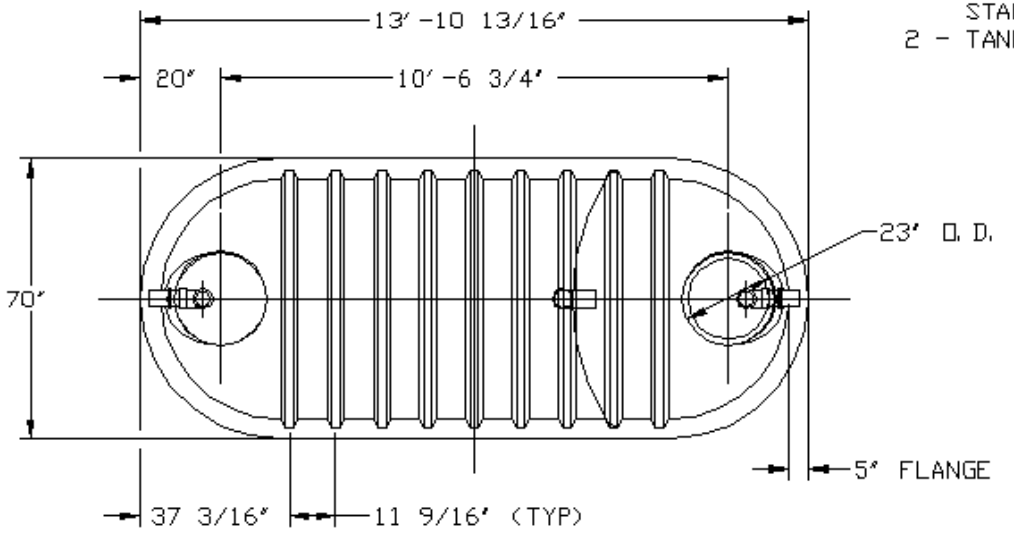

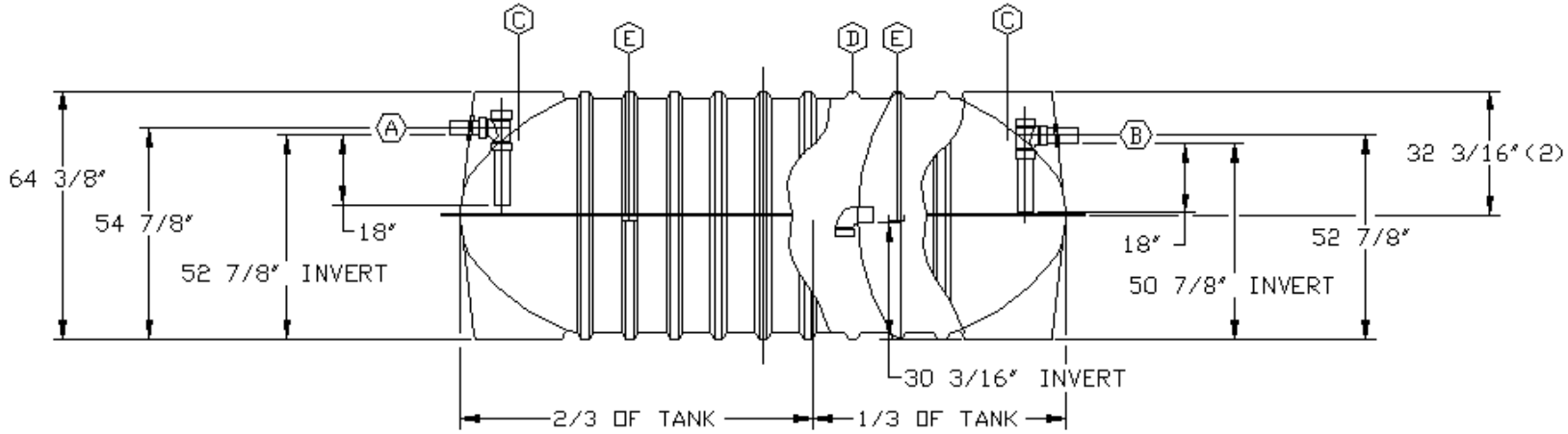

A	4" DIA SCH 40 PVC INLET PIPE WITH INTERNAL SANITARY TEE & PIPES
B	4" DIA SCH 40 PVC OUTLET PIPE WITH INTERNAL SANITARY TEE & PIPES
C	23" O. D. × 2" HIGH RISER ADAPTER SURFACE
D	BAFFLE WALL WITH 4" DIA SCH 40 PVC STREET ELBOW SINGLE CROSS-OVER & 3" DIA VENT HOLE
E	LIFTING LUG (2 ON EACH SIDE OF TANK, 4 LUGS TOTAL)

XERXES® CORPORATION

TITLE: RST-11 1500 IAPMO

DATE: 2-02

DR. NO. S10-957