REVISIONS				
ZONE	REV	DESCRIPTION	DATE	APPROVED

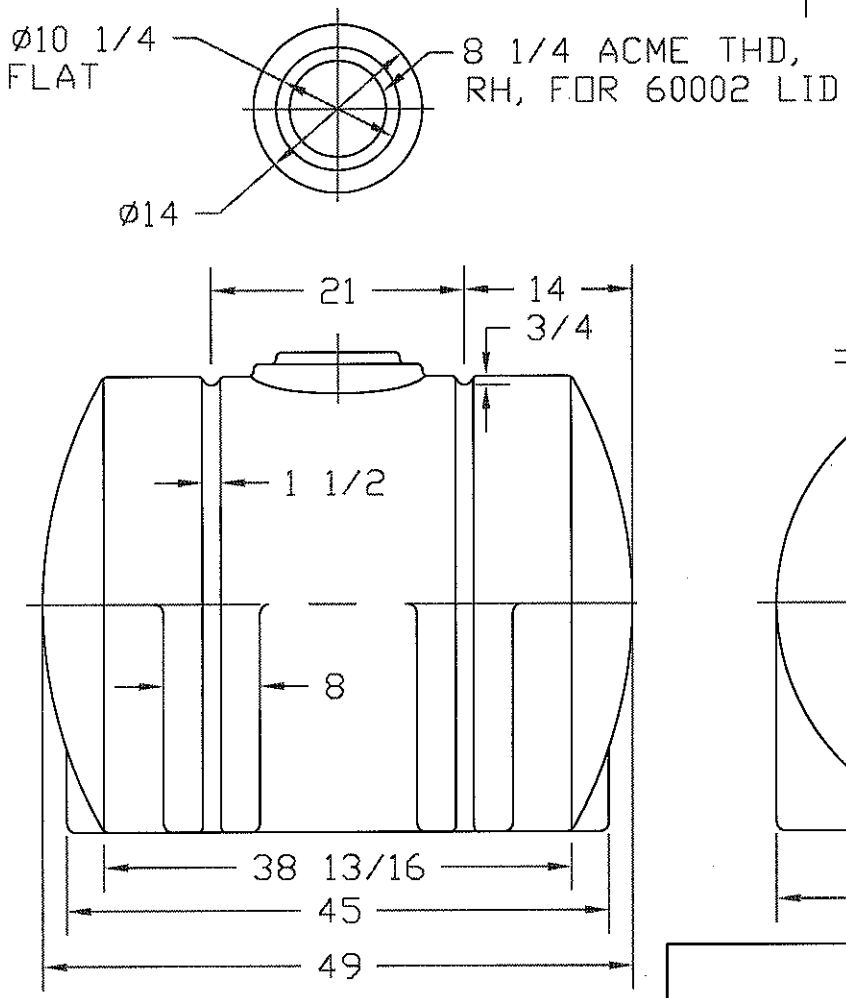

NOTE: GALLONAGE MARKS ON BOTH ENDS

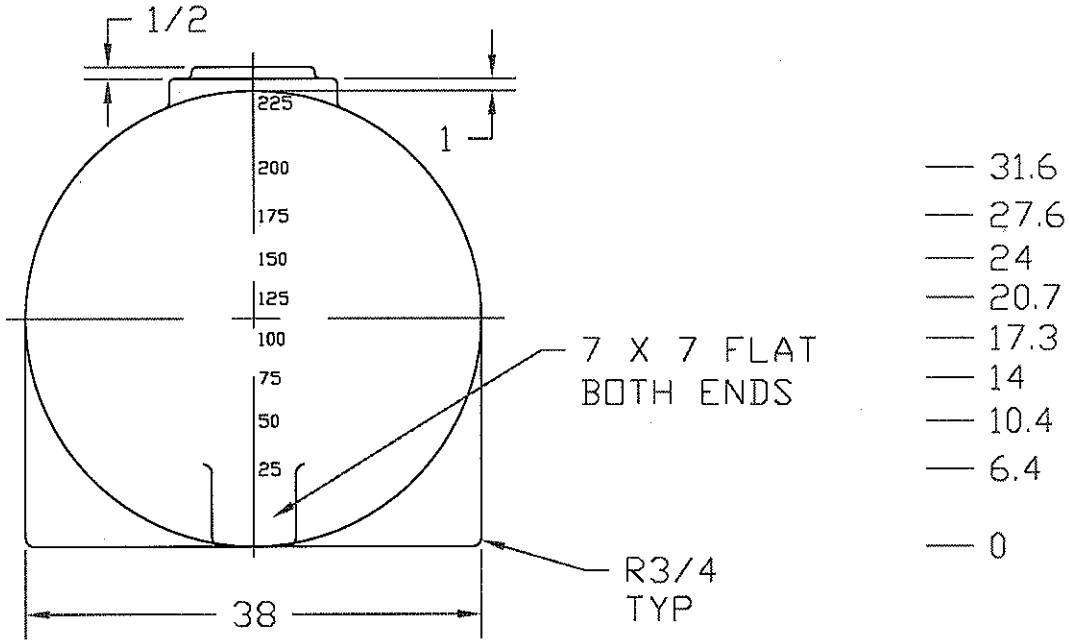

NORWESCO
ST. BONIFACIUS, MN

225 GALLON HORIZONTAL LEG TANK

JTP 07MAR96	SIZE A	FSCM NO.	DWG NO.	REV
	SCALE 1/16		SHEET	